SONY®

Sony Service Company
National Technical Services
A Division of Sony Electronics Inc.
Park Ridge, New Jersey 07656

CONFIDENTIAL

Service Bulletin
Hi Fi Products

CSA-13

Model: **D-330**

No. **509**

Subject: **No operation and/ or Sound Skipping**

Date: January 28, 1997

Symptom:

(212) No operation and/ or Sound Skipping

Solution:
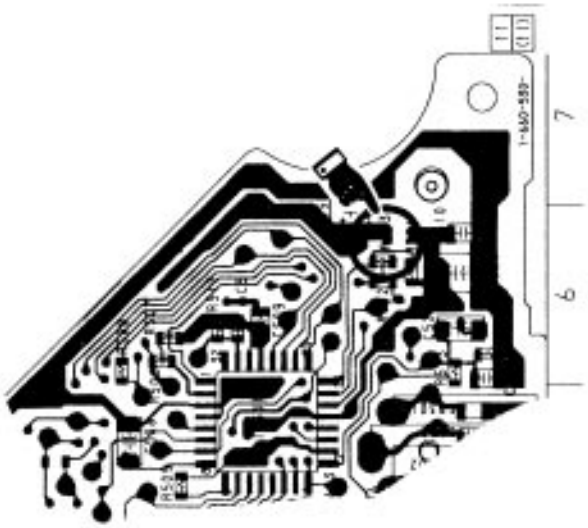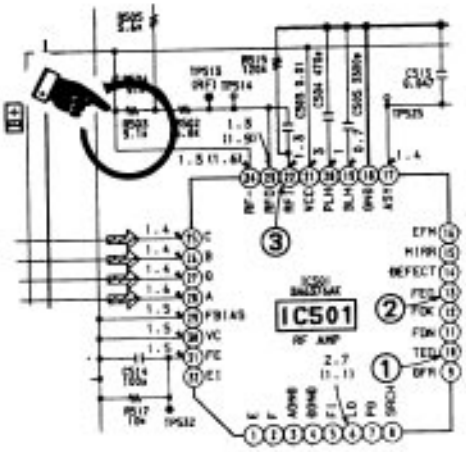
REF	FORMER		NEW	
	DESCRIPTION	PART NUMBER	DESCRIPTION	PART NUMBER
R503	12 KOHM CHIP RESISTOR	1-216-834-11	9.1 KOHM RESISTOR	1-218-345-11